TEQ-160WIR Series ► 144 to 182W

DC/DC Converter

- High power block with excellent thermal convection
- Operating temperature -40 °C up to +70 °C without derating!
- Increased shock & vibration resistance
- Ultra wide 4:1 input voltage
- EN 50155 approval for railway applications
- Excellent efficiency up to 93 %
- Input filter to meet EN 55022, class A

Full datasheet in progress

Specifications

Line regulation	0.2 % max.
Load regulation	0.3 % max.
Output voltage	+10 % / -20 % adjustable by internal potentiometer
Conducted EMI	EN55022, class A (internal filter)
Efficiency	92 % typ.
Operating temperature	-40 °C to +70 °C without derating
Thermal protection	shutdown at 115 °C
I/O isolation voltage	2250 VDC (60 sec.), basic insulation
Safety approvals	UL/cUL 60950-1, IEC/EN 60950-1, EN 50155 (Railway) - pending
Full datasheet	www.tracopower.com/products/teq160wir.pdf

Models

Order code	Input voltage	Output voltage	Output current max.
TEQ 160-4812WIR		12 VDC	13 A
TEQ 160-4815WIR	18-75 VDC	24 VDC	6.5 A
TEQ 160-4816WIR		28 VDC	5.5 A
TEQ 160-4818WIR		48 VDC	3.2 A
TEQ 160-7212WIR		12 VDC	15 A
TEQ 160-7215WIR	43-160 VDC	24 VDC	7.5 A
TEQ 160-7216WIR		28 VDC	6.5 A
TEQ 160-7218WIR		48 VDC	3.8 A

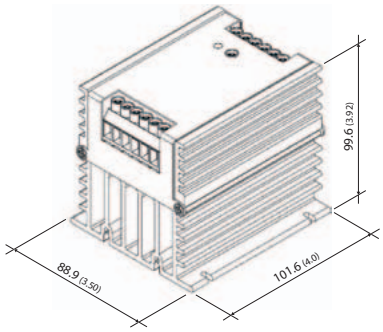

Optional DIN-rail mount adapter

TEQ-200WIR Series ► 180 to 240W

DC/DC Converter

- High power block with excellent thermal convection
- Operating temperature -40 °C up to +55 °C without derating!
- Increased shock & vibration resistance
- Ultra wide 4:1 input voltage
- EN 50155 approval for railway applications
- Excellent efficiency up to 93 %
- Input filter to meet EN 55022, class A

Full datasheet in progress

Specifications

Line regulation	0.2 % max.
Load regulation	0.3 % max.
Output voltage	+10 % / -20 % adjustable by internal potentiometer
Conducted EMI	EN55022, class A (internal filter)
Efficiency	92 % typ.
Operating temperature	-40 °C to +55 °C without derating
Thermal protection	shutdown at 115 °C
I/O isolation voltage	2250 VDC (60 sec.), basic insulation
Safety approvals	UL/cUL 60950-1, IEC/EN 60950-1, EN 50155 (Railway) - pending
Full datasheet	www.tracopower.com/products/teq200wir.pdf

Models

Order code	Input voltage	Output voltage	Output current max.
TEQ 200-4812WIR		12 VDC	18 A
TEQ 200-4815WIR	18-75 VDC	24 VDC	9.0 A
TEQ 200-4816WIR		28 VDC	7.5 A
TEQ 200-4818WIR		48 VDC	4.5 A
TEQ 200-7212WIR		12 VDC	20 A
TEQ 200-7215WIR	43-160 VDC	24 VDC	10 A
TEQ 200-7216WIR		28 VDC	8.5 A
TEQ 200-7218WIR		48 VDC	5.0 A

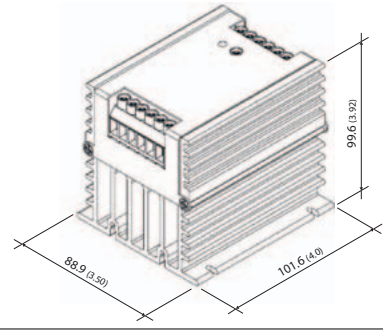

Optional DIN-rail mount adapter